ARK-LES CORPORATION STOUGHTON, MA

ENGINEERING DRAWING

DEPT	
1	1
2	
3	
4	
5	
6	
7	
8	
9	
10	
11	
12	8
NC	
JZ	

PART NAME: FEMALE TERMINAL

PART NO: 3000H 83A/

PART NO.	MATERIAL	FINISH
3000H 83A	.018 ±.001 THICK BRASS, C26000, R15T 84-87 PRETINNED PCS 1007	SEE MATERIAL
3000H 83AB	.018 ±.001 THICK BRASS, C26000, R15T 84-87	NONE

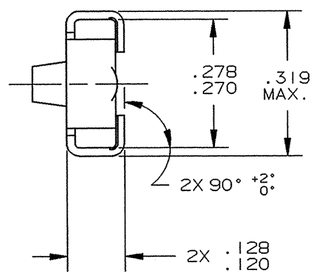

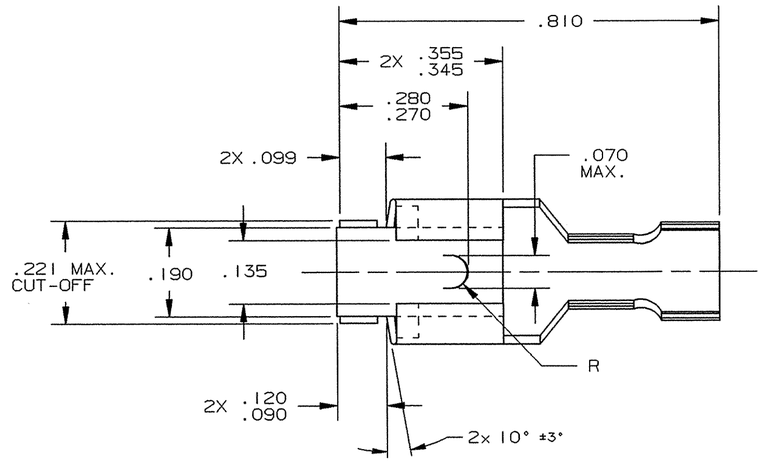

NOTES:
1. TO ACCEPT A .250 X .032 MALE TAB.
2. TO ACCOMMODATE #12 - #16 GAUGE WIRE.
3. INSULATION DIAMETER RANGE: .100 - .150.
4. RECOMMENDED STRIP LENGTH: 3/16 ±1/32.
5. TONGUE TO BE FORMED TO ACHIEVE AN ENGAGING FORCE OF 5 TO 10 LBS. AND A DISENGAGING FORCE OF 6 TO 12 LBS. USE 3000M 716 OR 3000M 742A/ MALE TABS FOR TESTING.
6. USE EDGE OF CARRIER STRIP AS DATUM LINE FOR DIMENSIONS.
7. FOR PARTS LESS DIMPLE, ADD SUFFIX -3 TO PART NUMBER. (I.E. 3000H 83A-3)
8. UNLESS OTHERWISE SPECIFIED, ALL RADII TO BE .015.
9. FOR PARTS WITH PAPER INTERLEAVING, ADD SUFFIX "K" TO PART NUMBER. (I.E. 3000H 83AK)

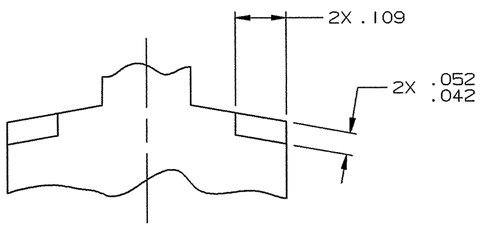

FLAT BLANK OF RECEPTACLE

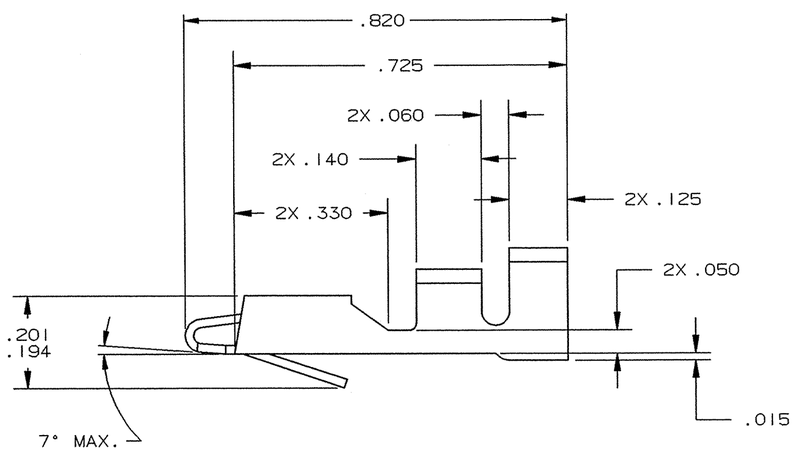

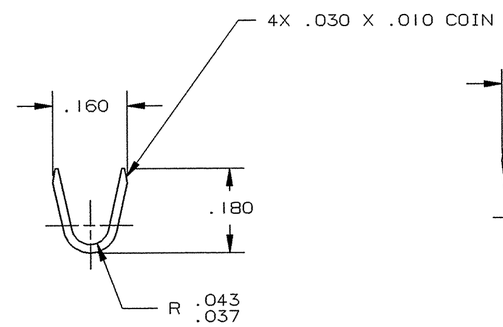

WIRE GRIP

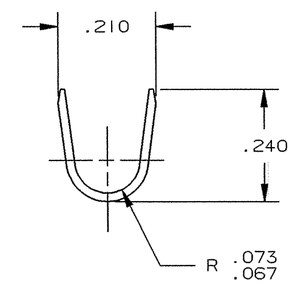

INSULATION GRIP

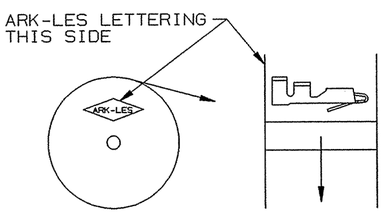

STANDARD REELING
(I.E. 3000H 83A)

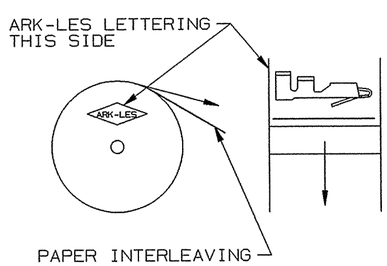

STANDARD REELING
WITH PAPER INTERLEAVING
(I.E. 3000H 83AK)

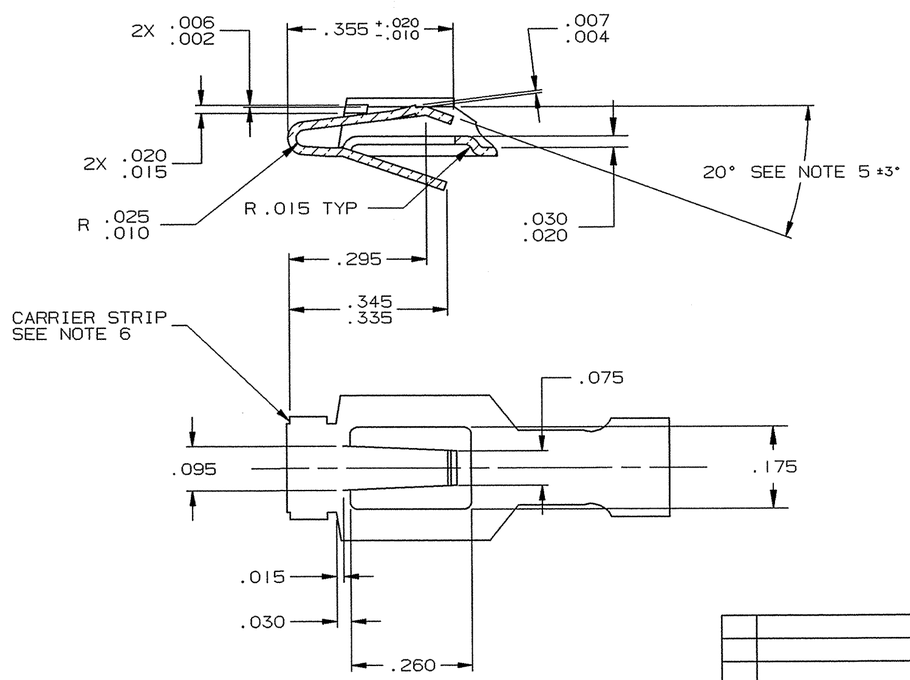

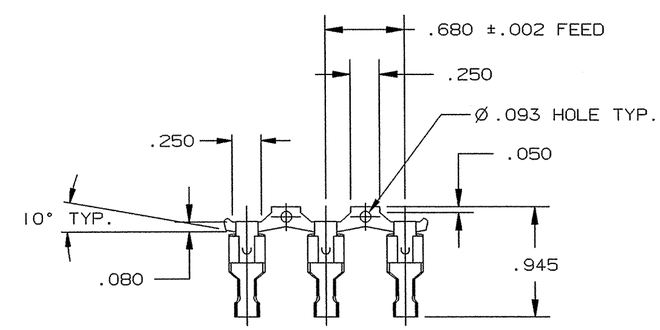

FABRICATED TERMINAL STRIP

SCALE: FULL

ARK-LES UNCONTROLLED

REV.	DESCRIPTION	DATE	DR.
H	REVISED & REDRAWN PER ECR #12211	8/27/01	RT

PROD. REL.	SK 0872	10/1/81	RT
QUOTE REL.			
DR: R. TASTULA	8/27/01		
CHK'D: R.W.T.	9-5-01		
APP: B.S.H.	9/18/01		
SUPERCEDES DWG. DATED:	9/22/81		
SCALE: 4:1	CAD NO: CT00014		

TOLERANCES UNLESS OTHERWISE SPECIFIED:
DECIMALS ±.010 | METRIC ±0.25mm | ANGLES ±1°

MATERIAL: SEE TABLE

FINISH: SEE TABLE

PART NO: 3000H 83A/

ORIGINAL IF RED